TEMPLATE

Fold on dotted line and fit on door edge

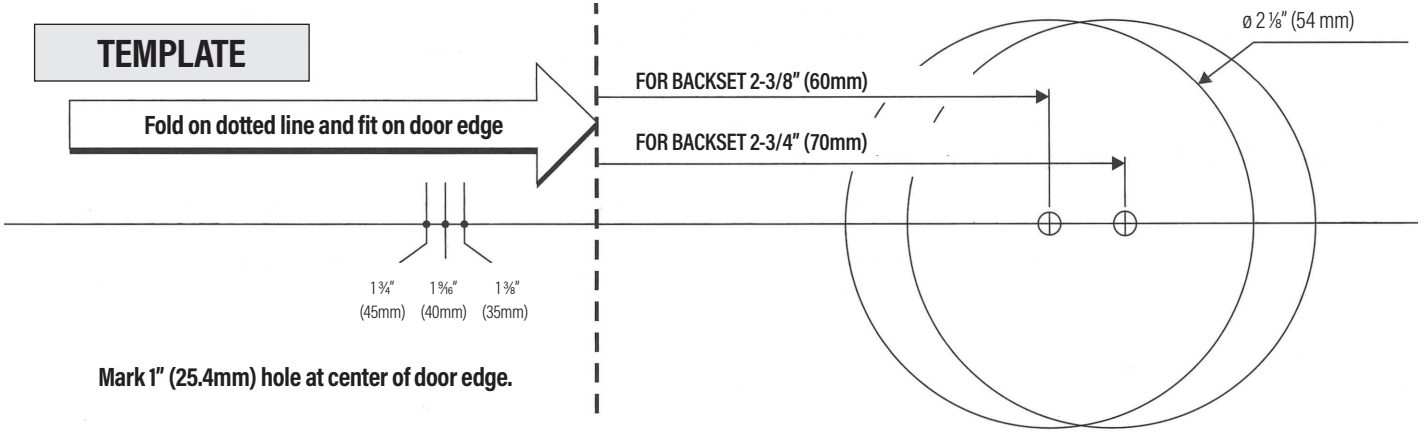

Mark 1" (25.4mm) hole at center of door edge.